12620.00.00.00

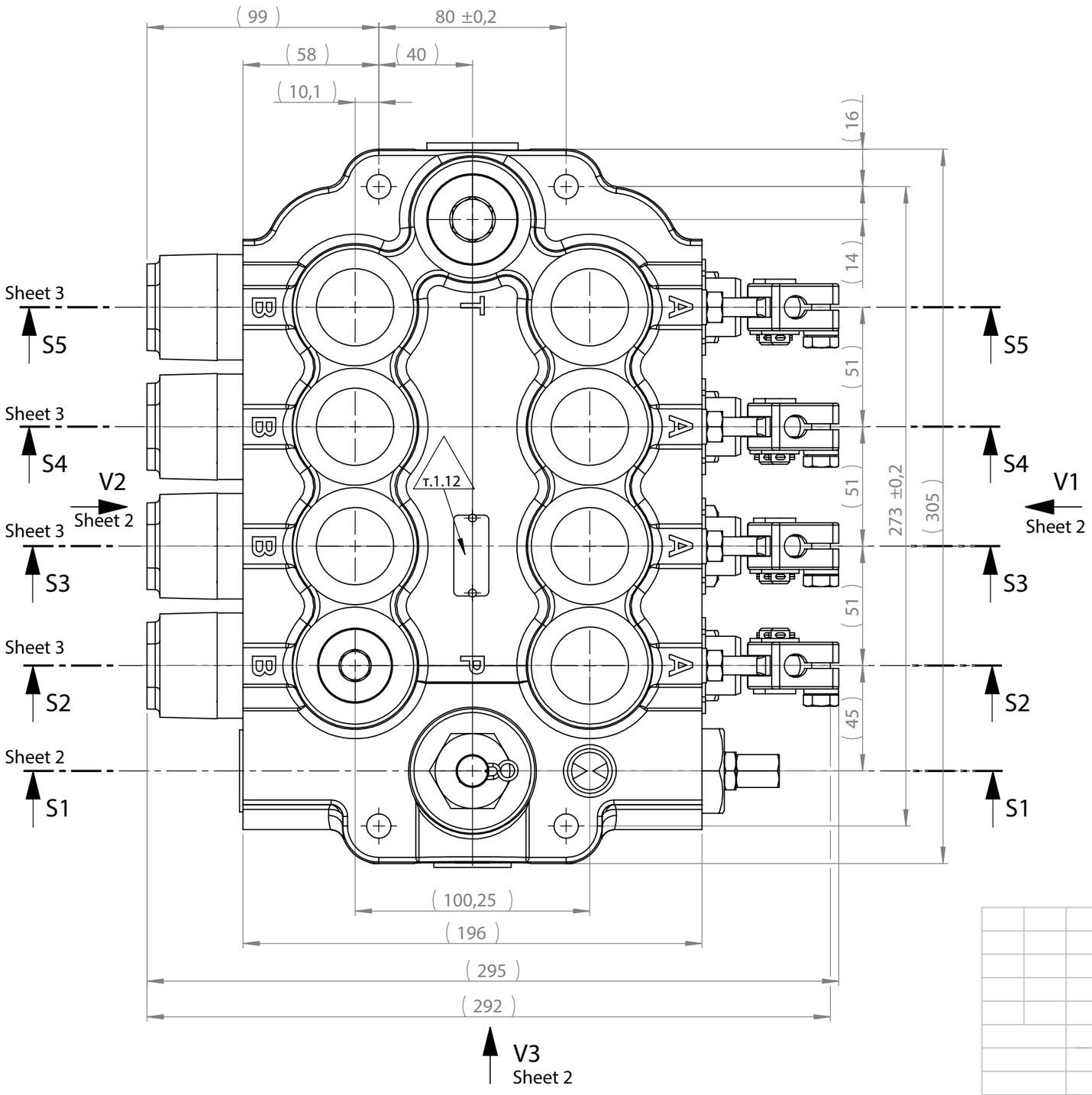

1. Technical parameters

1.1 Nominal pressure - 25MPa.

1.2 Nominal flow - 120 dm ^{3}/min

				28.08.2008	sheet 1/5	material		
					scale 1:2			
						description		weight kg
						Monoblock PX120		32.920
						№	12620.00.00.00	

12620.00.00.00

V1

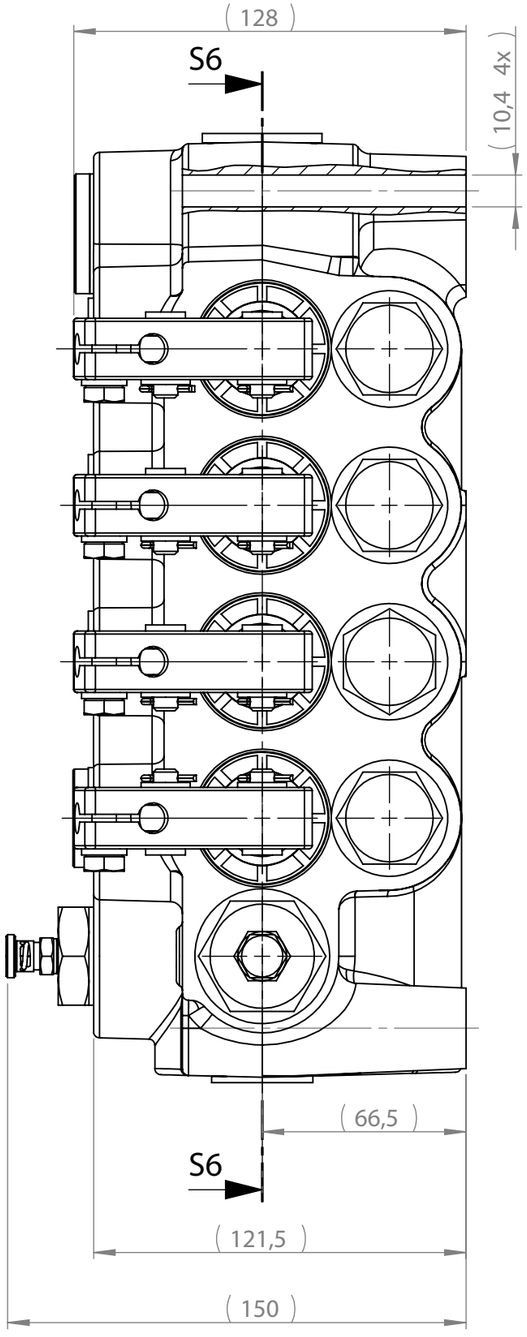

V2

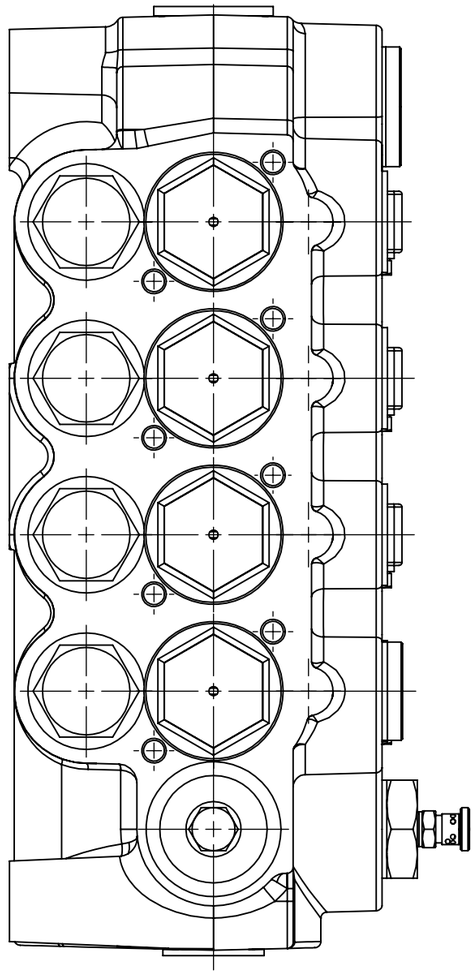

V3

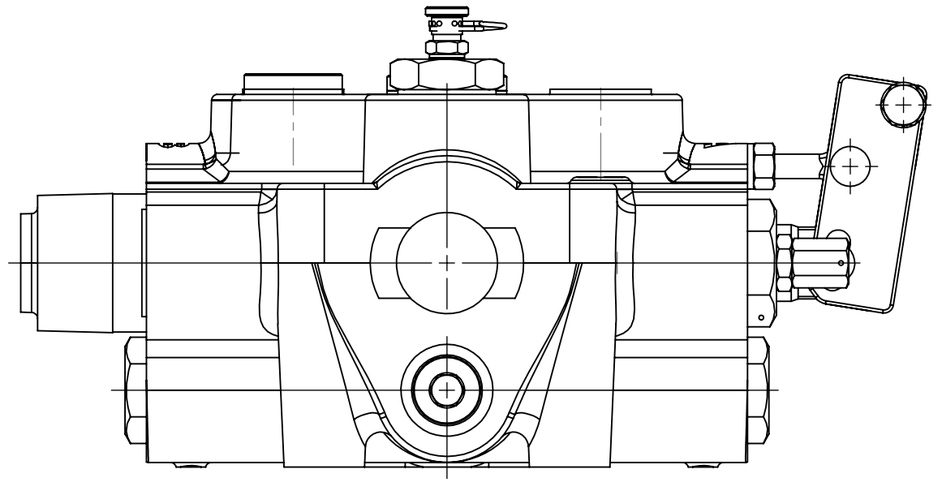

S1-S1

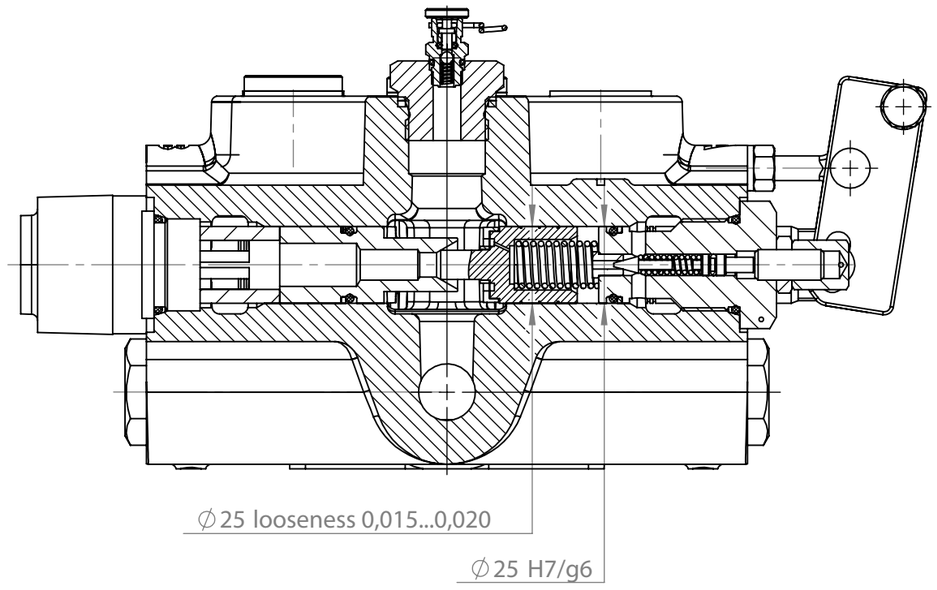

Note

1.Hydraulic valves with reduced looseness between spool and housing are executed with looseness 0.006…0.008 and are marked “n” after the distribution scheme of the relevant spool

2.If the way of centering and fixing is one and the same for all spools, the type of centering is noted only on the first spool

				28.08.2008	sheet 2/5	material		
					scale 1:2			
						description Monoblock PX120		weight kg 32.920
						№ 12620.00.00.00		

12620.00.00.00

S3-S3, S4-S4, S5-S5 (Variant)

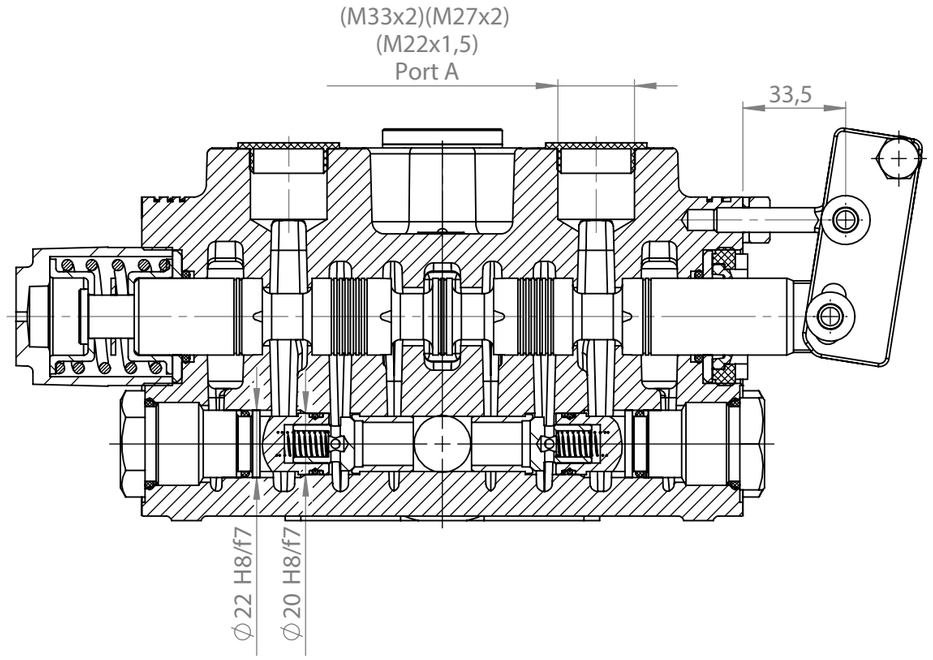

S2-S2 (Variant)

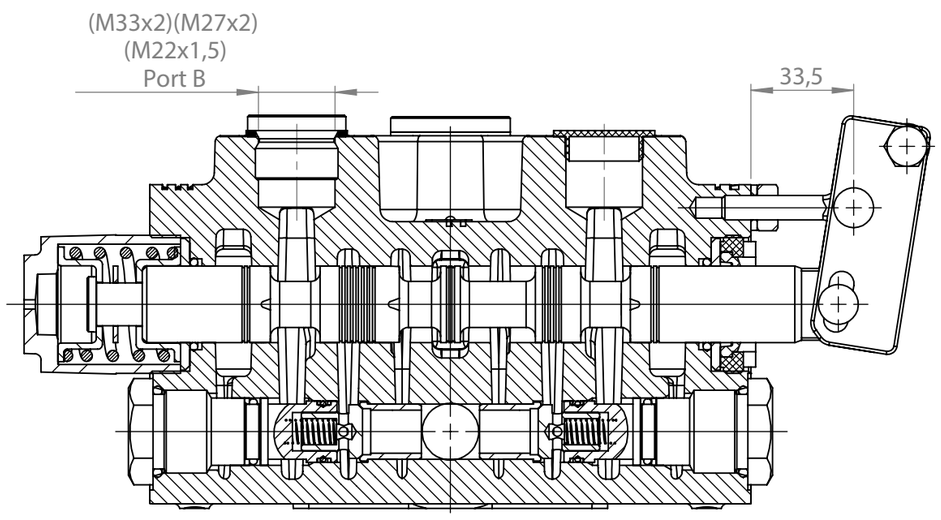

S6-S6

Without details pos. 5, 6, 7, 8, 9, 10, 40 и 41

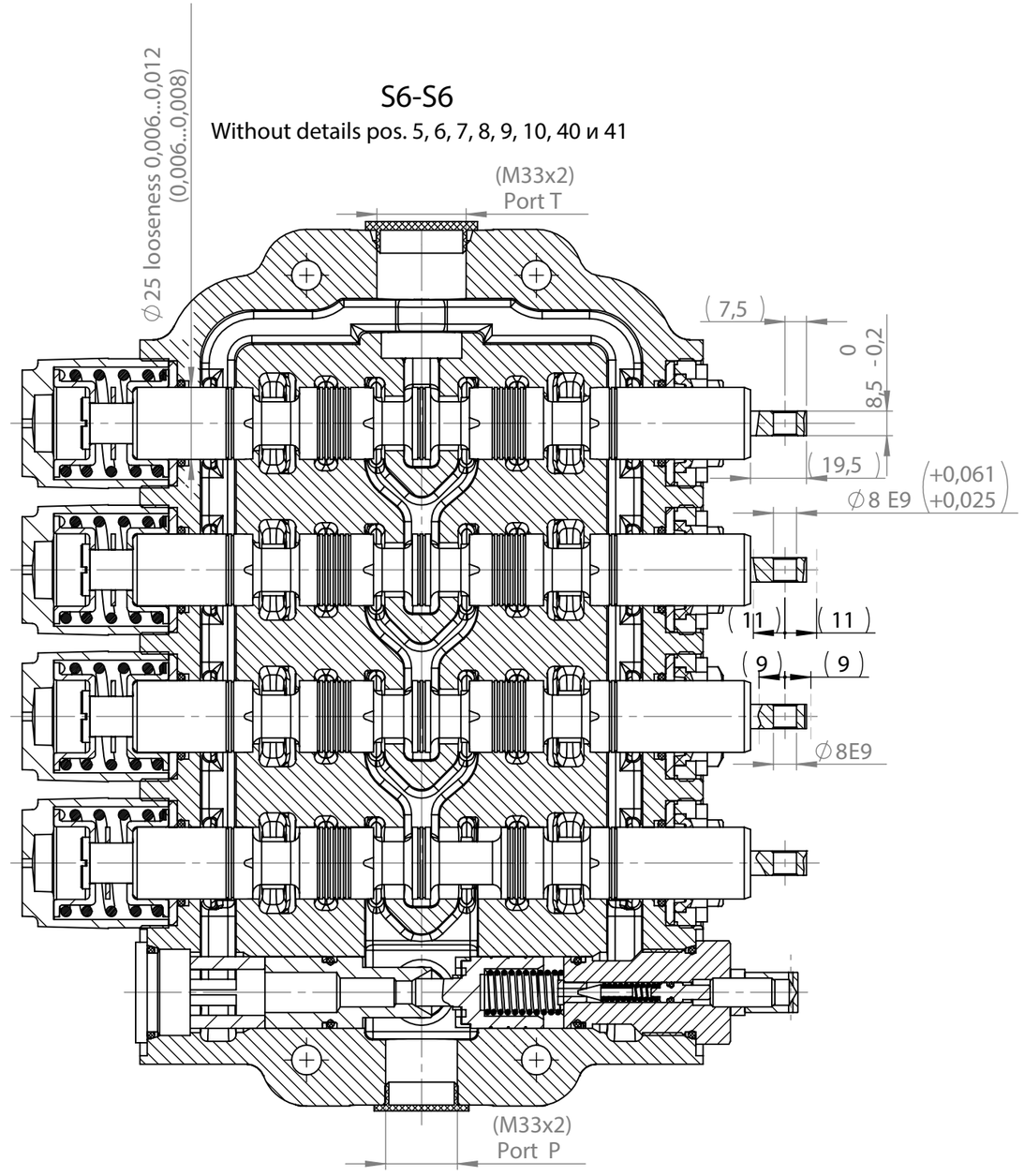

				28.08.2008	sheet 3/5	material		
					scale 1:2			
						description Monoblock PX120		weight kg 32.920
						№ 12620.00.00.00		

12620.00.00.00

Variant: 12620.00.00.00-14
PX120 - BnAnAA-1-1M/11

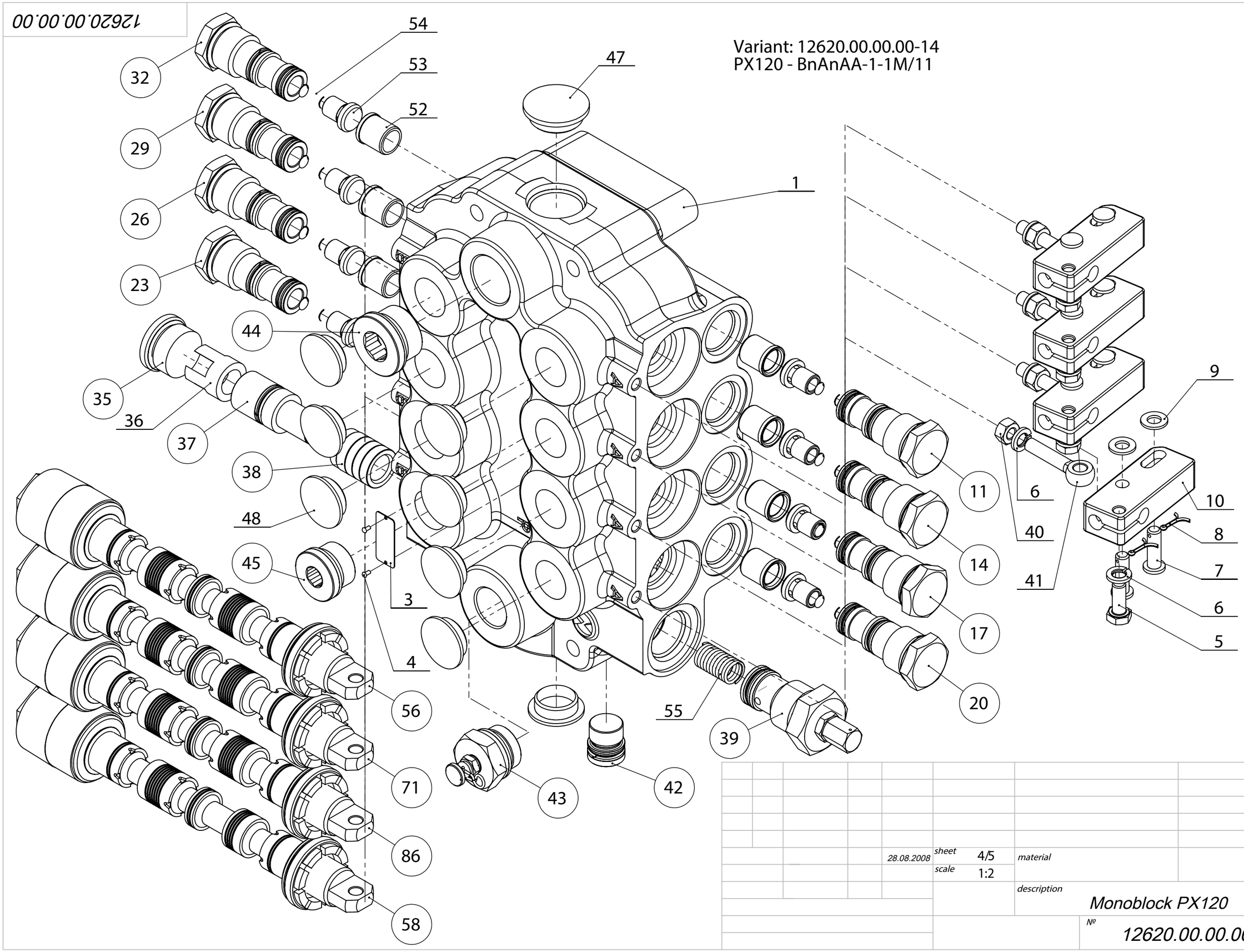

			28.08.2008	sheet 4/5	material		
				scale 1:2			
					description		weight kg
						Monoblock PX120	32.920
					№	12620.00.00.00	

12620.00.00.00

Variant : 12620.00.00.00-14
PX120 - BnAnAA-1-1M/11

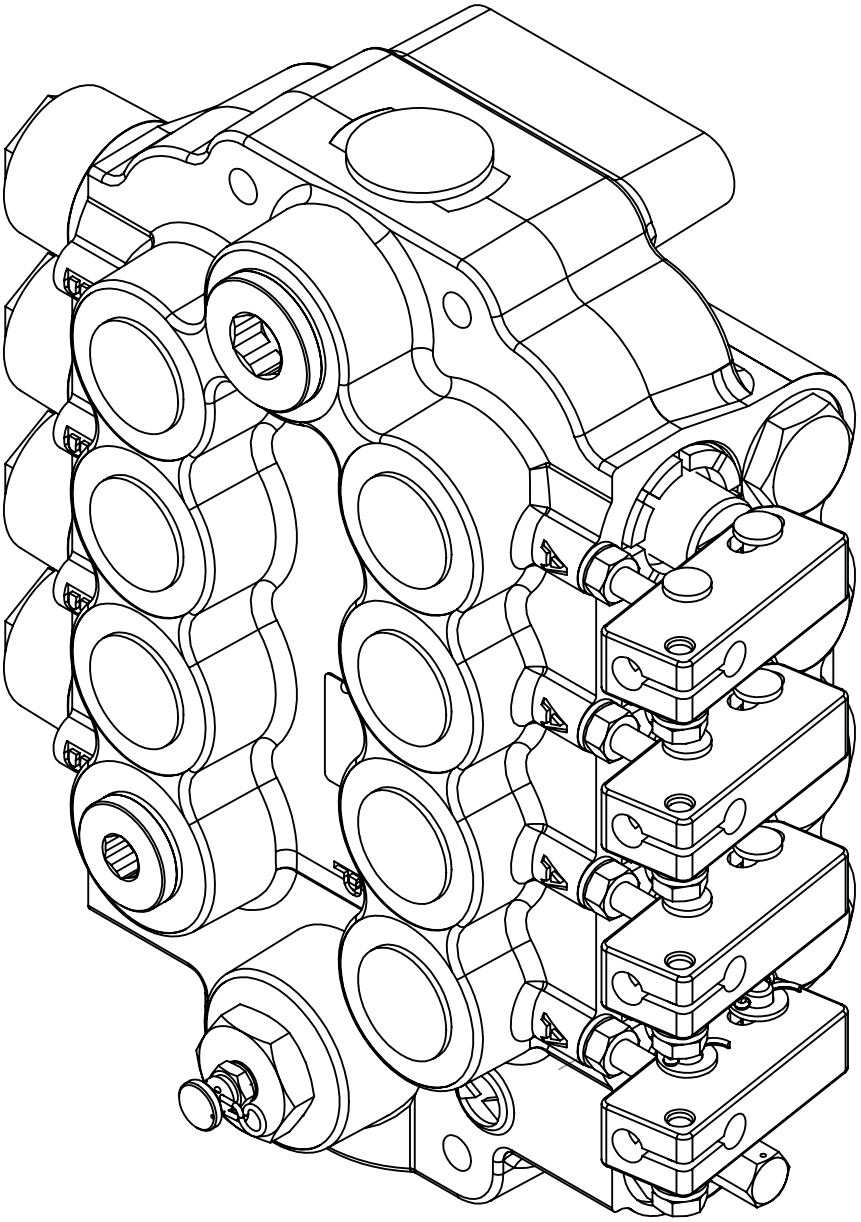

				28.08.2008	sheet 5 / 5	material		
					scale 1:2			
						discription Monoblock PX120		weight kg 32.920
							№ 12620.00.00.00	